1

REV:01

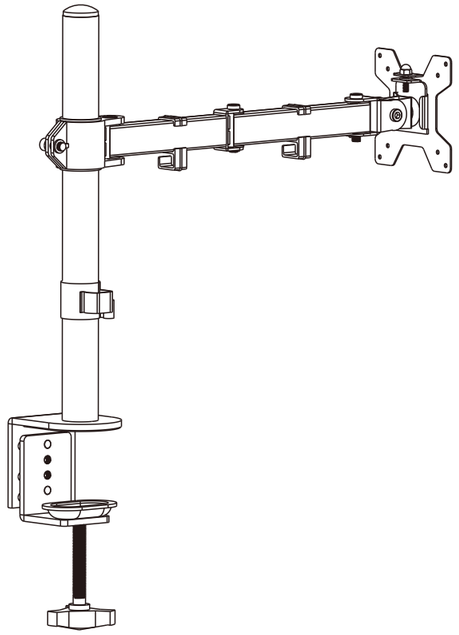

75x75

100x100

CAUTION: DO NOT EXCEED RATED LISTED WEIGHT. SERIOUS INJURY OR PROPERTY DAMAGE MAY OCCUR!
WE DO NOT RESPOSIBLE FOR DAMAGES CASUSED BY IMPROPER INSTALLATION!

DQ12-1008

PART LIST

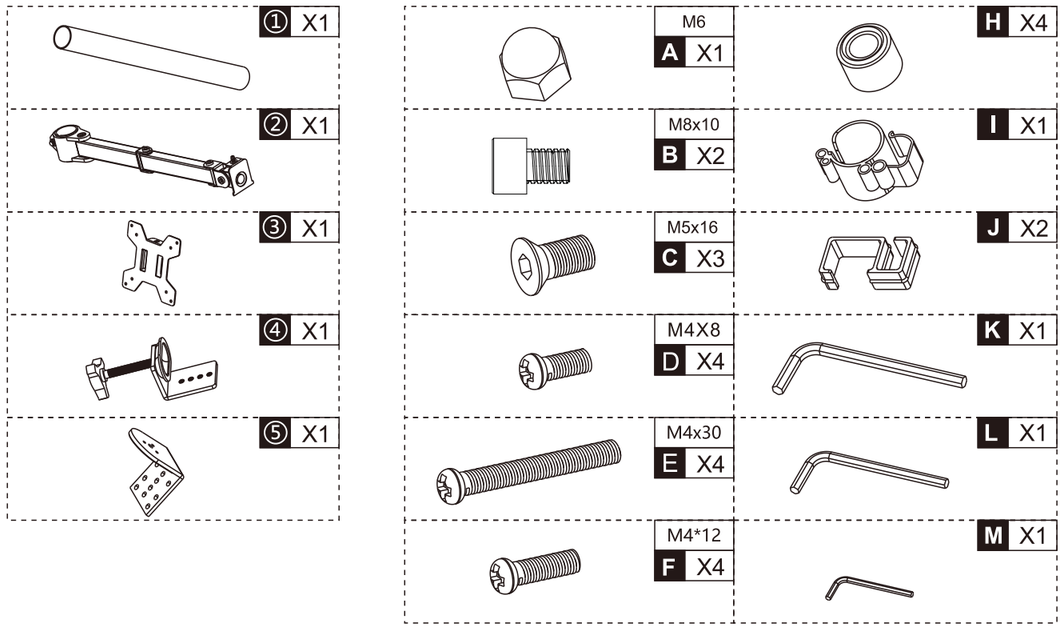

2

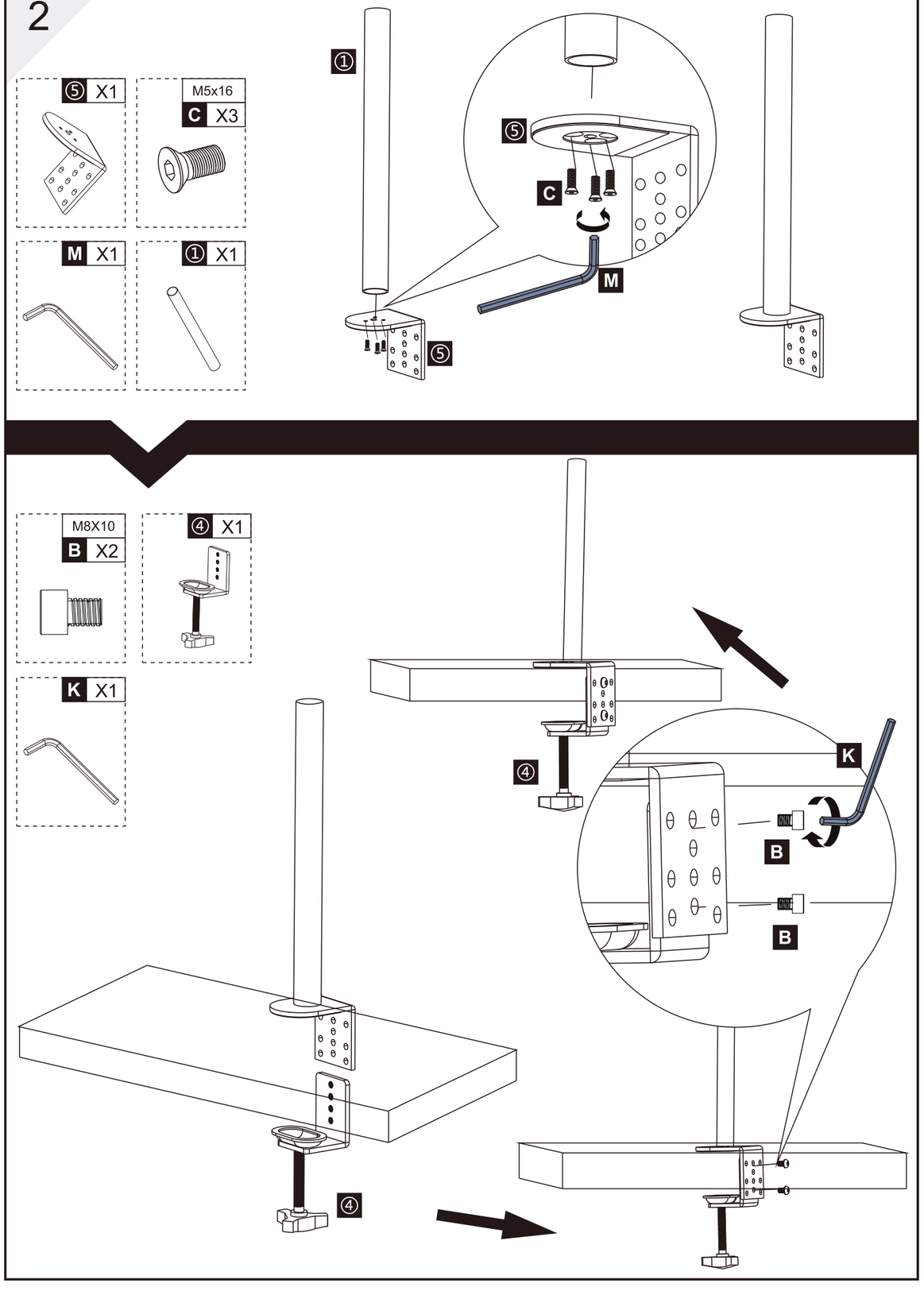

3

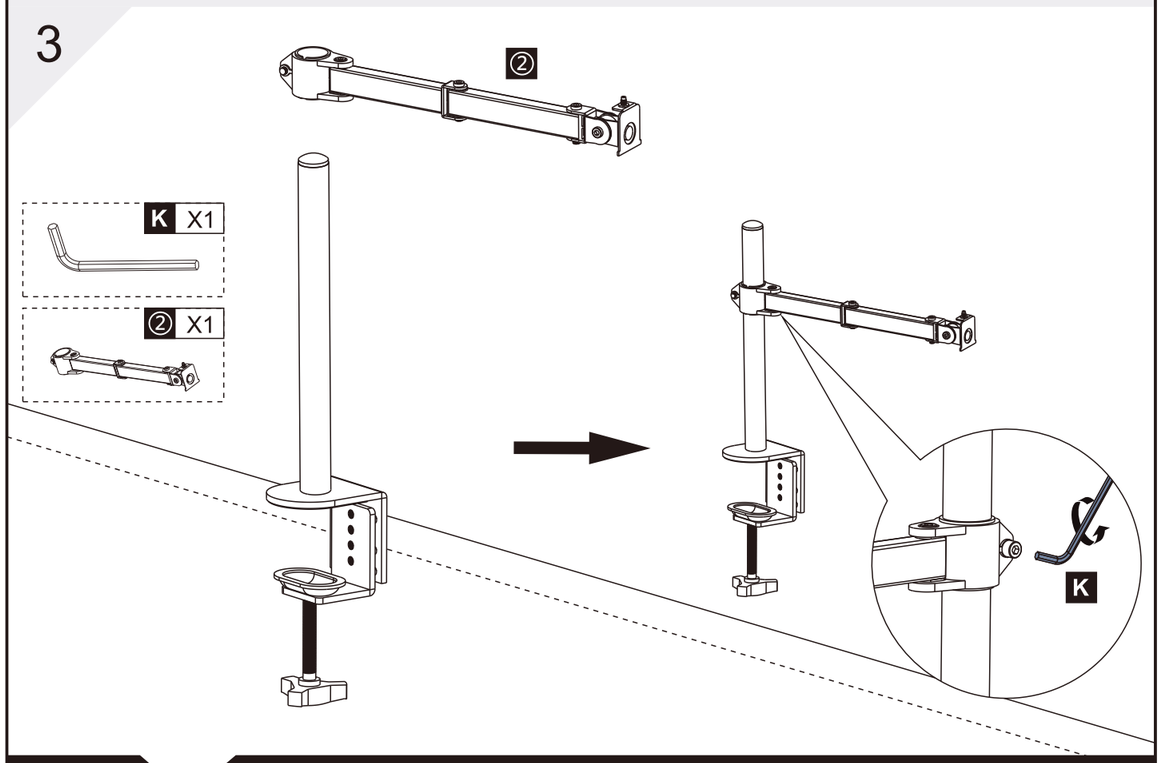
②
K X1
② X1
K

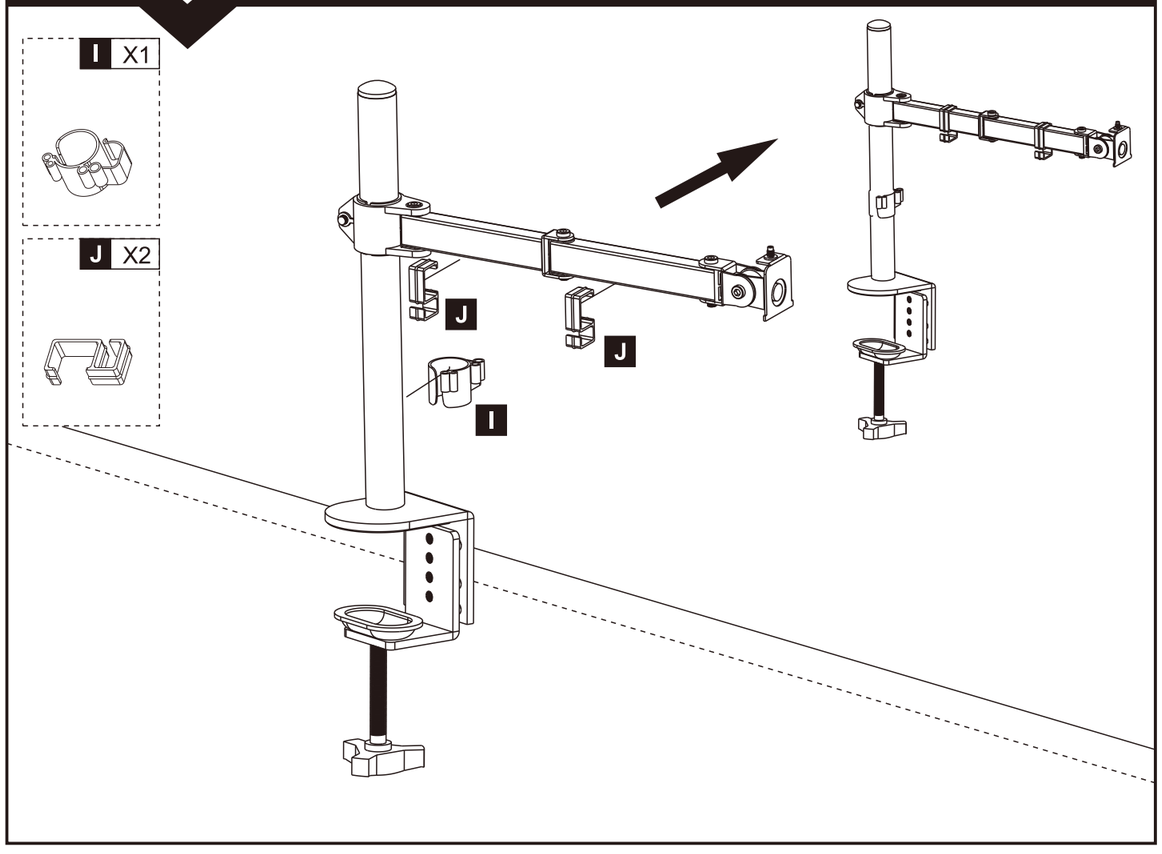
I X1
J X2
J
J
I

4

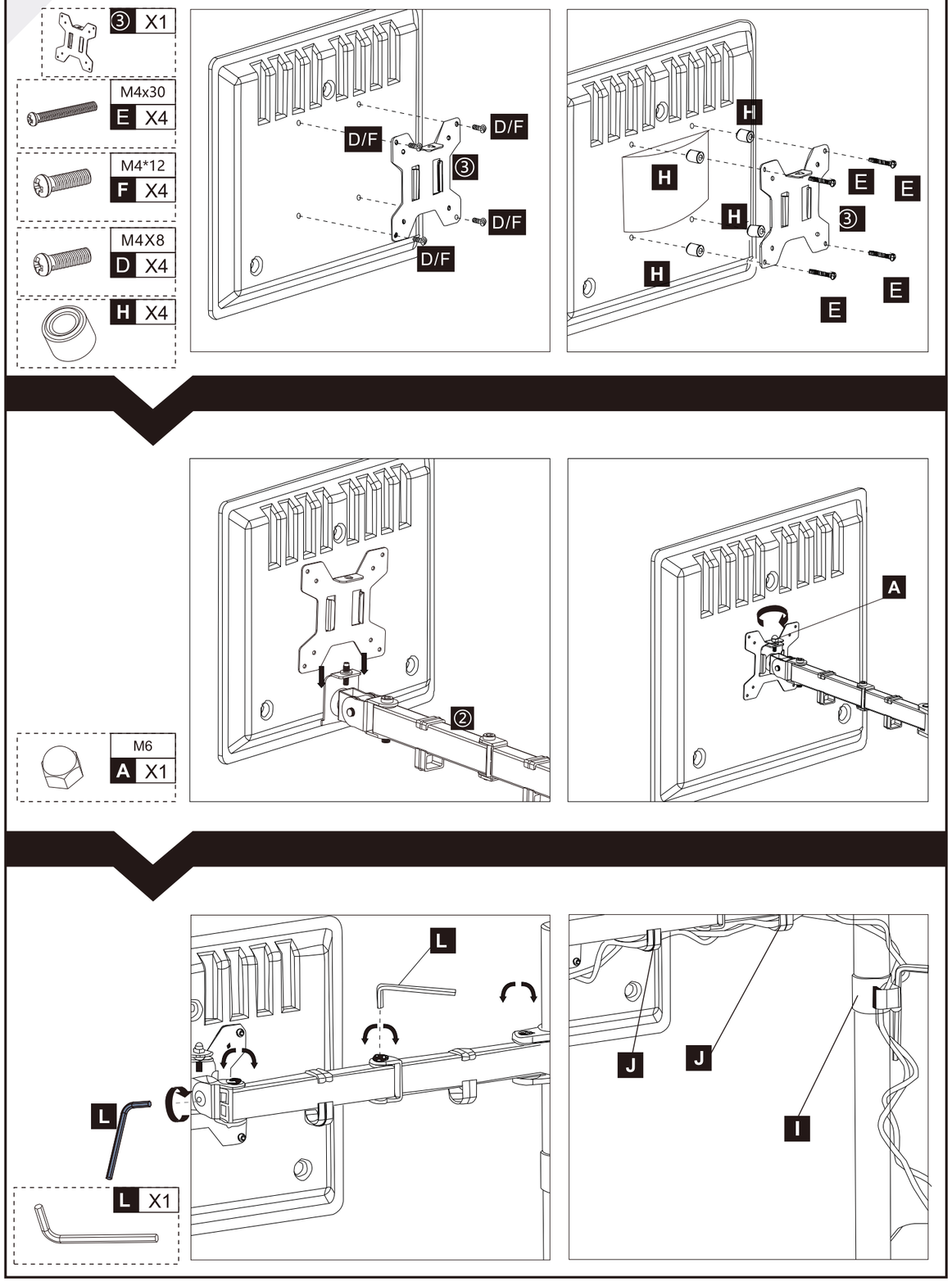
③ X1
M4x30
E X4
M4*12
F X4
M4X8
D X4
H X4
D/F
D/F
③
D/F
D/F
H
H
H
E
E
③
E
E
M6
A X1
②
A
L
L
L X1
J
J
I